3M
Germany
EUROPEAN DISTRIBUTION CENTER Jüchen

Expectation for Deliveries

May 2012

Table of Contents

1 Address for Deliveries……..……2
2 Site Map……..…...…….……3-5
3 Receiving……...……..……5
3.1 Delivery date / delivery advice……5
3.2 Truck loading and unloading……...5
4 Delivery Documents…..……..……...6
5 Packaging Material……..……...……6
6 Shipping Container Labelling…….....….7
7 Pallets and Load Units……...……8
7.1 Load building…….…….....9
7.2 Load building Pails, Hob bocks, etc…….....10
7.3 Load Marking……11
8 Special Agreements……..……..……..11

1.Delivery Address

3M Deutschland GmbH
European Distribution Center
Neusser Str. 200
D-41363 Jüchen
Phone: +49-2131 /14-9128 und 14-9152
Fax: +49-2131 / 14-129550
Receiving.edcjuechen@mmm.com

3M Deutschland GmbH
Jüchen Nord/TOR 2
Neusser Str. 201
D-41363 Jüchen
Phone: +49-2131 / 14-9541 und 14-9542
Fax: +49-2131 / 14-129550
Receiving.edcjuechen@mmm.com

Partial shipments up to 10 pallets

Spedition Kleine GmbH
An der Glasshuette 1
D-41516 Grevenbroich-Kapellen
Phone: +49 2182 / 822161 (Mr. Weggebakker)
Opening times between 10-17 o´clock

EDC Jüchen

2. Site Map

Please contact our Guard Officers!

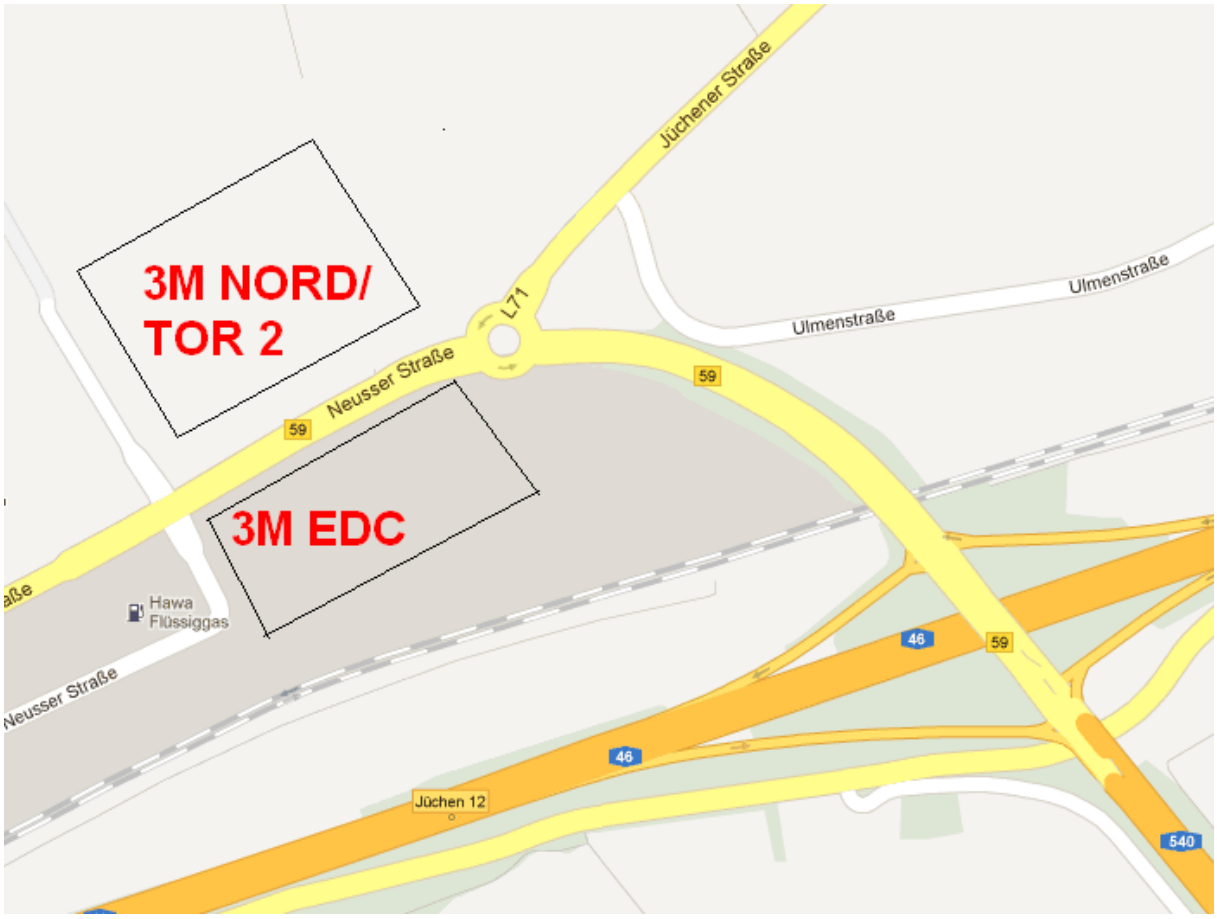

Please find as follows a guideline to assist you to comply with the general requirements of our logistics systems. To keep this compendium brief you will find some references to detailed 3M policies, guidelines, specification, etc. attached in brackets.

3. Receiving

These supplier expectation rules are part of each purchase and delivery contract. Non-conformance with these rules may lead to delivery rejects.
In case of rejects 3M will not accept any charges, further more we reserve to send back the goods in charge of the supplier.

These points can lead to a delivery reject:
• the delivery date is not kept
• unsorted or defective goods
• missing packing list
• discrepancies between delivery quantities and packing list quantities
• damaged or dirty goods
• False delivery address
• pallets packed too high
• material does not carry product labels according to 3M specification
• pallets must be unloaded from the side
• no pre-advice
• missing or wrong customs documents

3.1 Delivery date / delivery advice

Small quantities (less than 10 pallets) can be forwarded to Spedition Kleine GmbH by our receiving department.
Exceptions:

- Return goods
- Packing material
- Customs deliveries

Deliveries with pre-advice will be scheduled with preference, if they are advised at least 48 hours prior to delivery.
If the truck is not in time it´s possible that the driver has to wait before we can unload.
We need our 3M Stock Number to check if the material is for EDC Jüchen or for our second Warehouse Jüchen North.
Complete trucks should be advised either by fax, Email or by telephone at least 48 hours prior to delivery to minimize clearing times for the truck.

Deliveries could be done from:
Monday-Friday between 6.00 - 20.00 o'clock or with special agreement.
Addresses and contacts can be found on page 2!

3.2 Truck loading and unloading

Unloading of trucks is only possible from the back; Unloading from the side isn't possible.
Please refer this restriction during truck loading in your operation and please make sure that your trucks are suitable for a fork lift unloading.

4. Delivery Documents

- Deliveries without packing list or with bad readable packing list will be rejected.
- If the delivery comes from a country outside the European Union, a freight letter and customs document (f.e. T-1/ Carnet-TIR) must be provided for customs clearance.
- EDC-Jüchen will only accept deliveries for delivery address "3M EDC Jüchen". Deliveries for other supply points will be rejected.

Required packing list information:

- PO-Number (and PO line number)
- 3M-ID number (XX-XXXX-XXXX-X)
- ordered quantity
- supply chain unit
- material description
- delivered quantity in number of supply chain units
- shipping date or invoicing date
- country of origin for deliveries from outside European Union
- total number of pallets and total number of loose pieces/cartons
- we need the CMR and the Packing list or loading list
- when we receive a sample order we need an information on packing list who ordered the material

5. Packaging Material

(If prescribed see: Packaging Material Specifications)
It is Supplier's responsibility to choose packaging material and means of sufficient quality that conforms with the requirements of transportation, loading and unloading as well as storing in order to avoid damage in transit, including any necessary handling up to the end user.
The method of packaging must also comply with the respective requirements to protect the goods (e.g. to withstand transportation stress), the environmental and the customer. It will be supplier's responsibility to meet especially all safety regulations for dangerous goods.
The German Packaging Waste Management System must be considered and supported.
For example the "Green Dot" and the "RESY".
In the following there are a couple of key points:
• The empty space in packages must be filled with neutral, dustless and non-polluting material.
• The use of plastic filling material needs separate permission.
• Corrugated boxes with plastic reinforcements, etc. will not be accepted
• The box sealing method of UN approved shippers must comply with suppliers specification.

Number of items per carton must not change! If you want to change the quantity per pack unit, a new 3M ID must be assigned!

6. Shipping Container Labelling

(see also: Global Shipping Container Labelling Standards and if prescribed see: Packaging Standards,
Packaging Material Specifications)

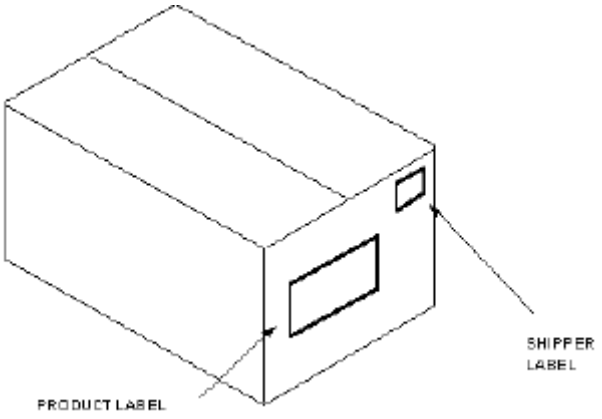

- Each shipping container must be marked with an identification label!
- Shipper cartons which are containing multiple items must be clearly signed as "Mixed Carton". A contents list inside the box is required to be able to identify the goods!
- The number of mixed cartons should be kept on a minimum!
- The **3M ID or the EAN Product number** must be provided on each outer carton (also in case of full pallets).
- The product marking compliant to hazardous regulations (ADR) must be done by the supplier and must be adjusted if the hazardous regulations (ADR) change.
- Hazardous goods must be marked with the correct hazardous label; the UN number inclusive English description must be provided together with the hazardous label. This is also necessary for cross border transports.
- Product specific handling instructions (i.e. do not break, do not store with more than x °C) shall be provided as pictograms on each pack unit. Symbols should be taken from DIN/ISO 55 402.

Shipping containers which are not marked in compliance with these rules can lead to the reject of the complete delivery !

7. Pallets and Load Units

- All goods have to be shipped on Euro-Pallets 1200x800 mm (DIN 15 146 T2).

Euro-Pallets DIN 15 146 Teil-2

- The quality of pallets must comply with the UIC-standard 435-4 VE (see next page) The obvious exceptions are the physical properties (size, weight, shape, etc.) of the goods are logically dictate an alternative pallet size. However, the following 3M specified pallets should be preferably used:
  - 48" - One-Way Pallet, 800x1300 mm, (Specification No.: DV-7060-0003-6)
  - NT - One-Way Pallet, 1100x1200 mm, (Specification No.: DV-9960-0047-2)

Other pallets

- It is supplier's responsibility to select a pallet base of adequate strength to support the goods to be shipped.
- Euro-Pool-pallets are directly one-for-one exchanged in the receiving department after unloading - as far as they comply with UIC-standard 435-4.
- Other pooling systems e.g. Cheep pallets are only accepted according to contractual agreement with 3M. 3M is registered Cheep customer.
- Deliveries on one way pallets or damaged pallets (scrap pallets) are accepted. However, the company 3M reserves the right to charge the supplier for repacking and pallet disposal with a rate of Euro 50,-- per pallet. Remark: The above listed 3M-specified alternative pallets are excluded.
- Crate pallets (DIN 15 155) and other special shipping container can not be exchanged at this time and thus inadmissible.
- It is possible to arrange special agreements regarding the use of other load means and equipment. In any case approval and specification of the purchase department is necessary before first delivery

In accordance with UIC guideline 435-4 VE EURO pallets are not exchangeable in the case of one or several of the following defects:

- a board is missing, diagonally or crossways broken,
- more than two side bottom boards, side panels or one cross piece is splintered off so that more than one nail or screw shank is visible per board,
- one block is missing, in such a way broken or splintered off that more than one nail or screw shank is visible,
- essential markings are missing or unreadable,
- obviously inadmissible components are used for repairing (boards or blocks are too thin, too narrow, too short) or
- the general condition is as badly as the maximum load-carrying capacity can no more guaranteed (boards or blocks are rotten or splintered off).

7.1 Load building

(If prescribed see: Packaging Standard)

- Pallets are to be packed without overhang (see illustration below).
- Overall unit load height, including pallet, shall not exceed 1,5 m. Loads over 1,5 must be approved by EDC Logistics Engineering (see Page13) before first delivery

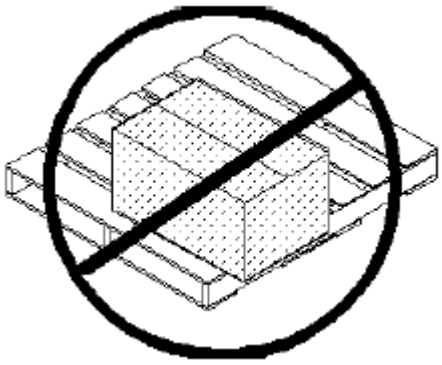

- Unit loads must be securely stretch wrapped alternatively strapping methods (polyester straps) or master cartons can be used.
- Stretch film load unit protection must secure the load to the pallet by adequate stratch wrapping around pallet base and load.
- Whenever possible combine stacking is highly recommended to achieve optimum stacking strength of the load.

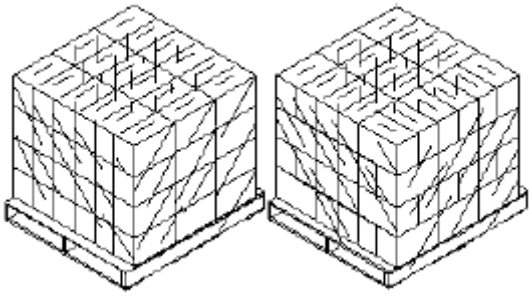

- On mixed pallets (different items on one pallet) items pure layers must be packed. The different weights shall be taken into account (heavy = down, light = up).
- Pallet loads should be stacked to provide a flat, stable top to allow placement of another unit load on top, when possible (see illustration below).
- The of pallet loads should be stacked to provide
- Shipping container labels must be read from outside the pallets as well as product related, product by product variable information like serial numbers, run lot numbers, etc. Labels should not be placed over a seam or closure or on top of sealing tape.

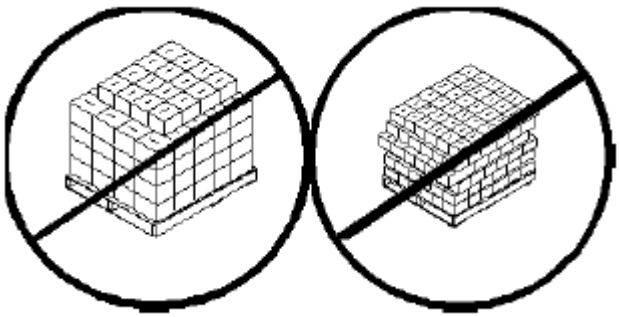

7.2 Load building Pails, Hob bocks, etc.

(If prescribed see: Packaging Standard)
Pails, Hob bocks, etc. must be unitized stacked on pallets which are dimensioned in accordance with
the load weight and transportation strain.
The methods of load unit protection must guarantee that product and package are not damaged, e.g.
by using

- a corrugated sheet placed on the pallet under bottom layer to protect goods from squeezing between the deck board gaps.
- a top cap
- stretch film or polyester straps (see illustration).

In case of stretch raping goods must be secured to pallet by having the first few wraps around the base of the pallet!

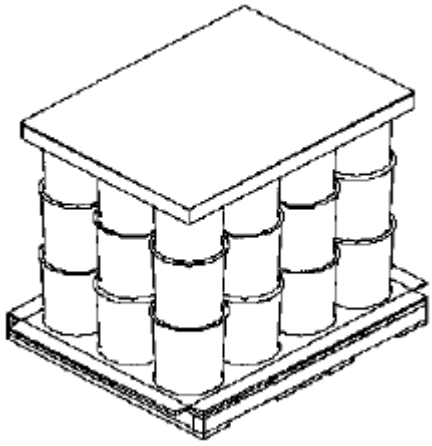

7.3 Load Marking

(if prescribed see: Packaging Standard)

- Product specific handling instructions must be provided as pictogram / icon on the pallet where it can be easily seen.
- A load unit which carries multiple items should be marked with "MIXED PALLET".
- The number of mixed pallets should be kept to a minimum!

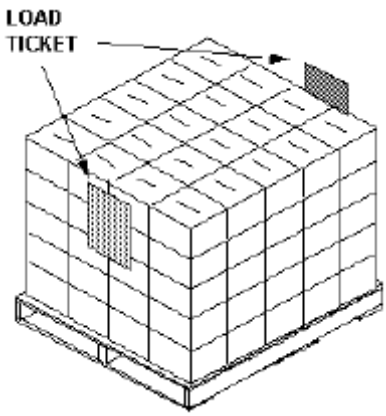

8. Special Agreements

Special agreements can only be done with the EDC Special Handling department.
3M Germany
European Distribution Center Jüchen
Neusser Str. 200
D-41363 Jüchen
Phone:
+49-2131 / 14-9227 (Herr Holtschneider)
+49-2131 / 14-9177 (Herr Zillessen)
+49-2131 / 14-9220 (Herr Kemper)
and/or
Warehouse receiving dept.
see page 2