Sizes on Page 2

3M™ Static Shielding Bag SCC 1000

Static Shielding Bag ~ Metal-In

This transparent, metallized static shield bag provides a static safe environment for sensitive electronic devices. Four layer construction. Polyester dielectric and metal layer provide Faraday effect shielding of ESD and fields. Tribocharging is minimized by the specially processed polyethylene. Flat and zipper closure styles. Coded for QC traceability. These bags are tested to meet or exceed certain electrical and physical requirements of ANSI/ESD S541, EIA 625, and to be ANSI/ESD S20.20 program compliant.

Specifications

Electrical Properties:	Typical Values		Test Method*
Surface Resistivity / Resistance	ASTM D257	or	ANSI/ESD STM11.11
Interior	$<10^{12}$ ohms/square	or	$<10^{11}$ ohms
Exterior	$<10^{12}$ ohms/square	or	$<10^{11}$ ohms
Metal	100 ohms		
Static Shielding	< 30 volts		EIA 541
Static Shielding	< 10 nJ		ANSI/ESD STM11.31
Static Decay	< 0.05 seconds		MIL-STD-3010 4046
Charge Generation			
PTFE	0.09 nC/sq.in.		Modified Inclined Plane
Quartz	0.01 nC/sq.in.		
Physical Properties:			
Tensile Strength	4700 PSI		ASTM D 882
Seam Strength	> 10 lbs		ASTM D 882
Light Transmission	40 %		Tobias
Heat Sealing Conditions			
Temperature	250°F - 375° F		
Time	0.5 - 3.5 seconds		
Pressure	30 - 70 PSI		
Thickness	3 mils		MIL-STD-3010 1003
Silicone or Amine Content	Not detected		FTIR

See 3M Data Sheets for these related items:

- Static Warning Labels
- Heat Sealer

Material Structure

SCC 1000 open top and ZipTop static shielding bags are manufactured from industry approved Polyester/Metal/Polyethylene laminates. The polyester dielectric in concert with the metal layer provide Faraday Effect shielding of an Electrostatic Discharge (ESD). The metal layer prevents the penetration of damaging electrostatic fields. Tribocharging is minimized by the specially processed polyethylene.

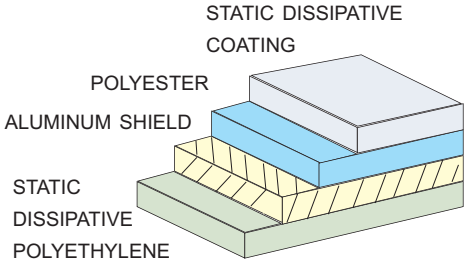

Important Notice

All statements, technical information, and recommendations related to 3M's products are based on information believed to be reliable, but the accuracy or completeness is not guaranteed. Before using this product, you must evaluate it and determine if it is suitable for your intended application. You assume all risks and liability associated with such use. Any statements related to the product which are not contained in 3M's current publications, or any contrary statements contained on your purchase order shall have no force or effect unless expressly agreed upon, in writing, by an authorized officer of 3M.

Warranty; Limited Remedy; Limited Liability.

This product will be free from defects in material and manufacture for one year from the date of purchase. **3M MAKES NO OTHER WARRANTIES INCLUDING, BUT NOT LIMITED TO, ANY IMPLIED WARRANTY OF MERCHANTABILITY OR FITNESS FOR A PARTICULAR PURPOSE.** If this product is defective within the warranty period stated above, your exclusive remedy shall be, at 3M's option, to replace or repair the 3M product or refund the purchase price of the 3M product. **Except where prohibited by law, 3M will not be liable for any indirect, special, incidental or consequential loss or damage arising from this 3M product, regardless of the legal theory asserted**.

*This product is not on the Qualified Product Listing under the Defense Standardization Program.

P R O D U C T D A T A S H E E T

SCC 1000 Static Shielding Bag METAL-IN

PRODUCT	ITEM NUMBER	DATASHEET
STATIC SHIELDING BAG, OPEN TOP AND ZIPTOP	100(W")(L")	1100-A 98-0799-1068-7

3M Electronic Solutions Division
6801 River Place Blvd
Austin, TX 78726-9000
US and Canada: 866-722-3736
Fax: 866-722-3735
Intl: 919-718-0000; Fax: 919-774-8174
email: 3Mstaticinfo@mmm.com; www.3Mstatic.com

3M is a trademark of 3M Company.
All other trademarks herein are the property of their respective owners.
© 3M 2011. All rights reserved.

3M™ Static Shielding Bag SCC 1000

Open Top Static Shielding Bag ~ Metal-In

W"x L"	P/N	W"x L"	P/N	W"x L"	P/N
2 x 3	10023	7 x 8	10078	12 x 18	1001218
2 x 4	10024	7 x 10	100710	12 x 24	1001224
2 x 6	10026	7 x 11	100711	12 x 25	1001225
3 x 5	10035	7 x 15	100715	12 x 30	1001230
4 x 4	10044	7 x 16	100716	14 x 16	1001416
4 x 6	10046	8 x 8	10088	14 x 18	1001418
4 x 8	10048	8 x 10	100810	14 x 20	1001420
4 x 24	100424	8 x 12	100812	14 x 30	1001430
4 x 26	100426	8 x 14	100814	15 x 18	1001518
4 x 30	100430	8 x 16	100816	16 x 18	1001618
5 x 6	10056	8 x 18	100818	16 x 20	1001620
5 x 7	10057	8 x 24	100824	16 x 24	1001624
5 x 8	10058	8 x 30	100830	16 x 30	1001630
5 x 10	100510	9 x 12	100912	18 x 18	1001818
6 x 8	10068	10 x 12	1001012	18 x 20	1001820
6 x 9	10069	10 x 14	1001014	18 x 24	1001824
6 x 10	100610	10 x 16	1001016	18 x 30	1001830
6 x 12	100612	10 x 18	1001018	20 x 20	1002020
6 x 14	100614	10 x 24	1001024	20 x 24	1002024
6 x 16	100616	10 x 26	1001026	22 x 24	1002224
6 x 18	100618	10 x 30	1001030	24 x 24	1002424
6 x 24	100624	11 x 14	1001114	24 x 30	1002430
6 x 26	100626	11 x 15	1001115	24 x 36	1002436
6 x 30	100630	12 x 12	1001212	30 x 24	1003024
6.5 x 10	1006.510	12 x 14	1001214		
6.5 x 16	1006.516	12 x 16	1001216		

- All standard sizes in-stock/same day shipment.
- Width is measured from inside seam to inside seam.
- Length is measured from the top edge to the bottom fold.
- Opening is in the "width" dimension.
- Custom bag sizes, custom printing, and custom hot stamping are available.
- Most sizes are packed 100 per case. Small sizes are packed 1000 or 500 per case.

3M SCC 1000 Open Top

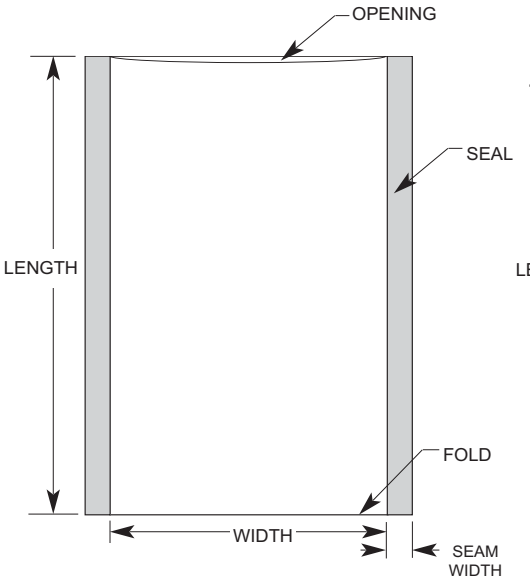

3M SCC 1000 ZipTop

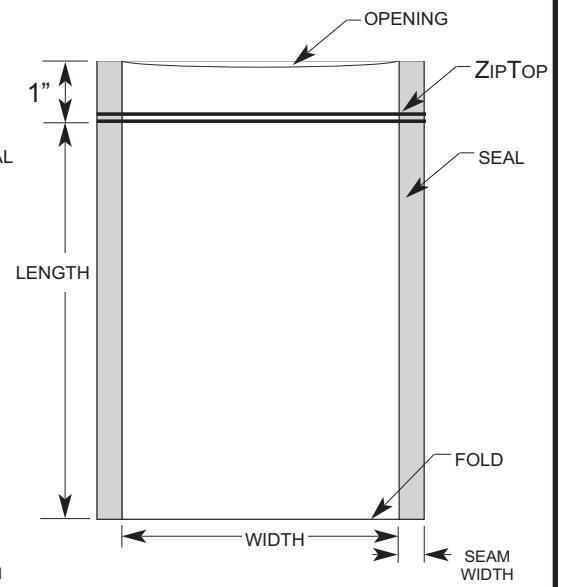

3M™ Static Shielding Bag SCC 1000 ZipTop™

Recloseable Static Shielding Bag ~ Metal-In

W"x L"	P/N	W" x L"	P/N	W" x L"	P/N
2 x 3	30023	6 x 24	300624	11 x 15	3001115
3 x 3	30033	6 x 30	300630	12 x 12	3001212
3 x 5	30035	7 x 15	300715	12 x 16	3001216
4 x 4	30044	8 x 8	30088	12 x 18	3001218
4 x 6	30046	8 x 10	300810	14 x 18	3001418
4 x 8	30048	8 x 12	300812	15 x 18	3001518
4 x 24	300424	9 x 12	300912	16 x 24	3001624
4 x 30	300430	10 x 10	3001010	18 x 18	3001818
5 x 8	30058	10 x 12	3001012	18 x 24	3001824
5 x 10	300510	10 x 14	3001014	20 x 24	3002024
6 x 8	30068	10 x 24	3001024	24 x 24	3002424
6 x 10	300610	10 x 30	3001030		

P R O D U C T D A T A S H E E T

SCC 1000 Static Shielding Bag METAL-IN

PRODUCT	ITEM NUMBER	DATASHEET
STATIC SHIELDING BAG, OPEN TOP AND ZIPTOP	100(W")(L")	1100-A 98-0799-1068-7

3M Electronic Solutions Division
6801 River Place Blvd
Austin, TX 78726-9000
US and Canada: 866-722-3736
Fax: 866-722-3735
Intl: 919-718-0000; Fax: 919-774-8174
email: 3Mstaticinfo@mmm.com; www.3Mstatic.com

3M is a trademark of 3M Company.
All other trademarks herein are the property of their respective owners.

© 3M 2011. All rights reserved.

Sizes on Page 2

3M™ Puncture Resistant Static Shielding Bag SCC 1300

Static Shielding Bag - Metal-in

SCC 1300 Metal-in static shielding bags provide higher puncture resistance to reduce bag tear from tubes and carriers. This transparent, metallized static shield bag provides a static safe environment for sensitive electronic devices. Bags are lot coded for QC traceability. These bags are tested to meet or exceed certain electrical and physical requirements of ANSI/ESD S541, EIA 625, and to be ANSI/ESD S20.20 program compliant.

Specifications

Physical Properties:	Typical Values	Test Method*
Puncture Resistance	16 lbs	MIL-STD-3010 2065
Thickness	3.2 mils	MIL-STD-3010 1003
Seam Strength	>10 lbs	ASTM D882
Heat Sealing Conditions:		
Temperature	300°F - 400°F	
Time	0.6 - 4.5 seconds	
Pressure	30 - 70 PSI	

Electrical Properties:			
Surface Resistivity / Resistance	ASTM D257	or	ANSI/ESD STM11.11
Interior	$<10^{12}$ ohms/square	or	$<10^{11}$ ohms
Exterior	$<10^{12}$ ohms/square	or	$<10^{11}$ ohms
Metal	100 ohms		
Static Shielding	< 30 volts		EIA 541
Static Shielding	< 10 nJ		ANSI/ESD STM11.31
Static Decay	< 0.05 seconds		MIL-STD-3010 4046
Silicone or Amine Content	Not detected		FTIR

Material Structure
3M SCC 1300 open top and ZipTop static shielding bags are manufactured from industry approved Polyester /Metal/ Polyethylene laminates. The polyester dielectric in concert with the metal layer provide Faraday Effect shielding of an Electrostatic Discharge (ESD). The metal layer prevents the penetration of damaging electrostatic fields. Tribocharging is minimized by the specially processed polyethylene.

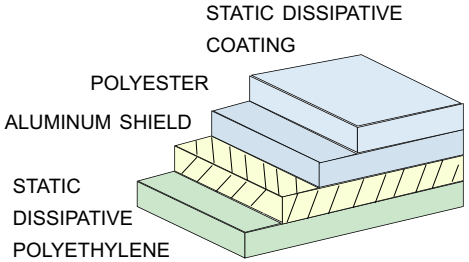

See 3M Data Sheets for these related items:

- Humidity Indicator Cards (HIC's)
- Desiccant
- Vacuum Sealers

Important Notice
All statements, technical information, and recommendations related to 3M's products are based on information believed to be reliable, but the accuracy or completeness is not guaranteed. Before using this product, you must evaluate it and determine if it is suitable for your intended application. You assume all risks and liability associated with such use. Any statements related to the product which are not contained in 3M's current publications, or any contrary statements contained on your purchase order shall have no force or effect unless expressly agreed upon, in writing, by an authorized officer of 3M.

Warranty; Limited Remedy; Limited Liability.
This product will be free from defects in material and manufacture for one year from date of purchase. **3M MAKES NO OTHER WARRANTIES INCLUDING, BUT NOT LIMITED TO, ANY IMPLIED WARRANTY OF MERCHANTABILITY OR FITNESS FOR A PARTICULAR PURPOSE.** If this product is defective within the warranty period stated above, your exclusive remedy shall be, at 3M's option, to replace or repair the 3M product or refund the purchase price of the 3M product. **Except where prohibited by law, 3M will not be liable for any indirect, special, incidental or consequential loss or damage arising from this 3M product, regardless of the legal theory asserted**.

*This product is not on the Qualified Product Listing under the Defense Standardization Program.

P R O D U C T D A T A S H E E T

SCC 1300 Puncture Resistant Static Shielding Bag

PRODUCT	ITEM NUMBER	DATASHEET
STATIC SHIELDING BAG, OPEN TOP AND ZIPTOP	130(W")(L")	1113-A 98-0799-1067-9

3M Electronic Solutions Division
6801 River Place Blvd
Austin, TX 78726-9000
US and Canada: 866-722-3736
Fax: 866-722-3735
Intl: 919-718-0000; Fax: 919-774-8174
email: 3Mstaticinfo@mmm.com; www.3Mstatic.com

3M is a trademark of 3M Company.
All other trademarks herein are the property of their respective owners.
© 3M 2011. All rights reserved.

3M™ Puncture Resistant Static Shielding Bag SCC 1300

Static Shielding Bag - open top

W"x L"	P/N	W"x L"	P/N	W"x L"	P/N
Please Inquire.					

3M SCC 1300 Open Top

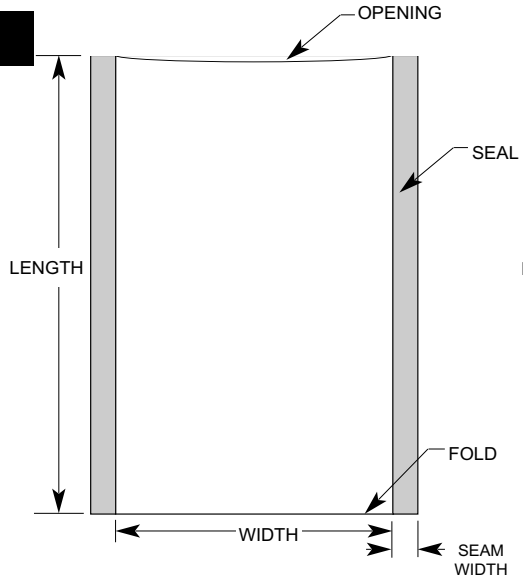

3M SCC 1300 ZipTop

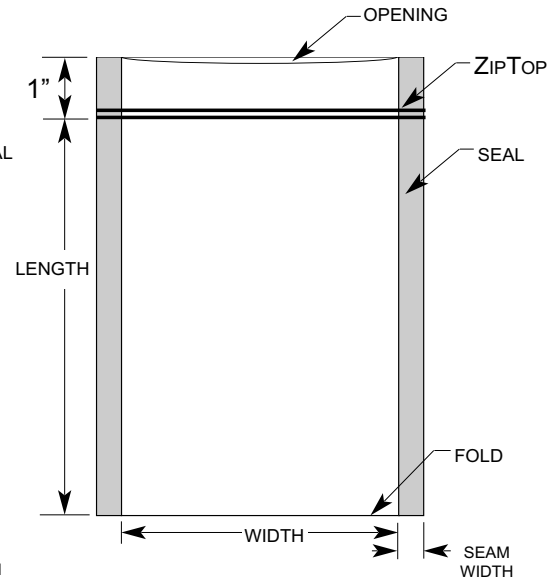

3M™ Puncture Resistant Static Shielding Bag SCC 1300

Static Shielding Bag - ZipTop Reclosable

W"x L"	P/N	W" x L"	P/N	W" x L"	P/N
Please Inquire					

- All standard sizes in-stock/same day shipment.
- Width is measured from inside seam to inside seam.
- Length is measured from the top edge to the bottom fold.
- Opening is in the “width” dimension.
- Custom bag sizes, custom printing, and custom hot stamping are available.
- Most sizes are packed 100 per case.
  Small sizes are packed 1000 or 500 per case.

P R O D U C T D A T A S H E E T

SCC 1300 Puncture Resistant Static Shielding Bag

PRODUCT	ITEM NUMBER	DATASHEET
STATIC SHIELDING BAG, OPEN TOP AND ZIPTOP	130(W”)(L”)	1113-A 98-0799-1067-9

3M Electronic Solutions Division
6801 River Place Blvd
Austin, TX 78726-9000
US and Canada: 866-722-3736
Fax: 866-722-3735
Intl: 919-718-0000; Fax: 919-774-8174
email: 3Mstaticinfo@mmm.com; www.3Mstatic.com

3M is a trademark of 3M Company.
All other trademarks herein are the property of their respective owners.
© 3M 2011. All rights reserved.

Sizes on Page 2

3M™ Metal-out Static Shielding Bag SCC 1500

Static Shielding Bag - Metal-out

3M SCC 1500 metal-out static shielding bags are approved by major electronics manufacturers for use worldwide. Our transparent, metallized static shield bag structure provides a static safe environment for sensitive electronic devices. This bag also provides low charge retention and rapid static decay. Bags are lot coded for QC traceability. These bags are tested to meet or exceed certain electrical and physical requirements of ANSI/ESD S541, EIA 625, and to be ANSI/ESD S20.20 program compliant.

Specifications

Physical Properties:	Typical Values	Test Method*
Thickness	3 mils	MIL-STD-3010 1003
Tensile Strength	7700 PSI	ASTM D882
Seam Strength	>10 lbs	ASTM D882
Heat Sealing Conditions:		
Temperature	300°F - 400°F	
Time	0.6 - 4.5 seconds	
Pressure	30 - 70 PSI	

Electrical Properties:		
Surface Resistivity / Resistance	ASTM D257	or ANSI/ESD STM11.11
Interior	$<10^{12}$ ohms/square	or $<10^{11}$ ohms
Exterior	$<10^{12}$ ohms/square	or $<10^{11}$ ohms
Metal	100 ohms	
Charge Retention	<100 volts	CPM
Static Shielding	< 30 volts	EIA 541
Static Shielding	< 10 nJ	ANSI/ESD STM11.31
Static Decay	< 0.05 seconds	MIL-STD-3010 4046
Silicone or Amine Content	Not detected	FTIR

Material Structure
3M SCC 1500 flat and ZipTop static shielding bags are manufactured using a proprietary top coating. The top coating and metal layer provide low charge retention and Faraday Effect shielding of an Electrostatic Discharge (ESD) with the associated electrostatic fields. Polyester dielectric stops the current from ESD. Tribocharging is minimized by the specially processed polyethylene.

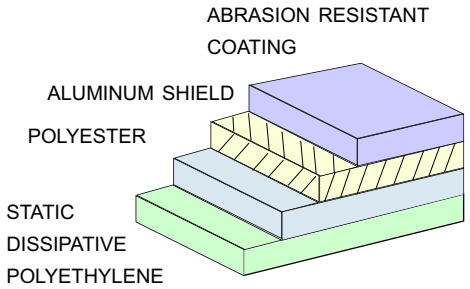

Important Notice
All statements, technical information, and recommendations related to 3M's products are based on information believed to be reliable, but the accuracy or completeness is not guaranteed. Before using this product, you must evaluate it and determine if it is suitable for your intended application. You assume all risks and liability associated with such use. Any statements related to the product which are not contained in 3M's current publications, or any contrary statements contained on your purchase order shall have no force or effect unless expressly agreed upon, in writing, by an authorized officer of 3M.

Warranty; Limited Remedy; Limited Liability.
This product will be free from defects in material and manufacture for one year from date of purchase. **3M MAKES NO OTHER WARRANTIES INCLUDING, BUT NOT LIMITED TO, ANY IMPLIED WARRANTY OF MERCHANTABILITY OR FITNESS FOR A PARTICULAR PURPOSE.** If this product is defective within the warranty period stated above, your exclusive remedy shall be, at 3M's option, to replace or repair the 3M product or refund the purchase price of the 3M product. **Except where prohibited by law, 3M will not be liable for any indirect, special, incidental or consequential loss or damage arising from this 3M product, regardless of the legal theory asserted**.

*This product is not on the Qualified Product Listing under the Defense Standardization Program.

See 3M Data Sheets for these related items:

- Humidity Indicator Cards (HIC's)
- Desiccant
- Vacuum Sealers

P R O D U C T D A T A S H E E T

SCC 1500 Metal-out Static Shielding Bag

PRODUCT	ITEM NUMBER	DATASHEET
STATIC SHIELDING BAG, OPEN TOP AND ZIPTOP	150(W")(L")	1101-B 98-0799-1066-1

3M Electronic Solutions Division
6801 River Place Blvd
Austin, TX 78726-9000
US and Canada: 866-722-3736
Fax: 866-722-3735
Intl: 919-718-0000; Fax: 919-774-8174
email: 3Mstaticinfo@mmm.com; www.3Mstatic.com

3M is a trademark of 3M Company.
All other trademarks herein are the property of their respective owners.
© 3M 2011. All rights reserved.

3M™ Metal-out Static Shielding Bag SCC 1500

Static Shielding Bag - open top

W"x L"	P/N	W"x L"	P/N	W"x L"	P/N
3 x 5	15035			12 x 16	1501216
4 x 6	15046	8 x 12	150812	12 x 18	1501218
5 x 8	15058	9 x 12	150912	14 x 18	1501418
6 x 8	15068	10 x 12	1501012	15 x 18	1501518
6 x 10	150610	10 x 14	1501014	16 x 24	1501624
6 x 30	150630	10 x 24	1501024	18 x 18	1501818
7 x 15	150715	11 x 15	1501115	18 x 24	1501824

3M SCC 1500 Open Top

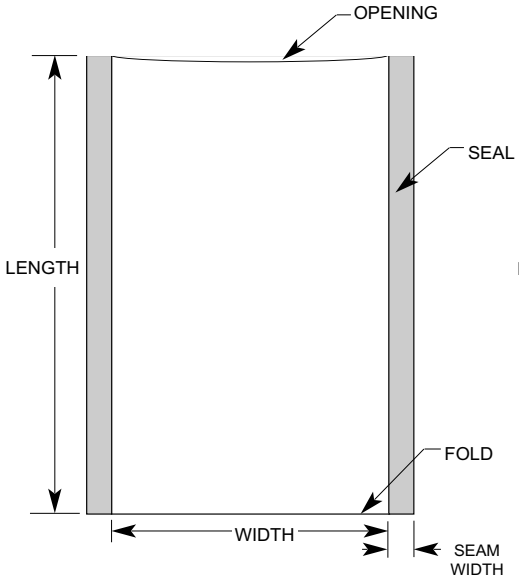

3M SCC 1500 ZipTop

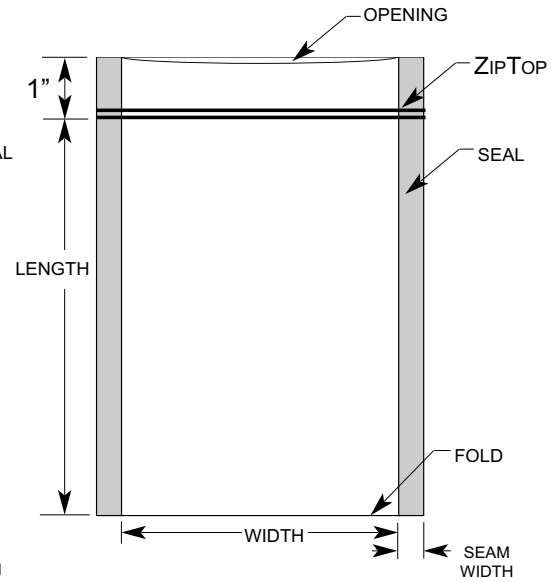

3M™ Metal-out Static Shielding Bag SCC 1500

Static Shielding Bag - ZipTop Reclosable

W"x L"	P/N	W" x L"	P/N	W" x L"	P/N
3 x 5	150Z35	5 x 8	150Z58	8 x 10	150Z810
4 x 4	150Z44	6 x 8	150Z68	10 x 12	150Z1012
4 x 6	150Z46	6 x 10	150Z610	12 x 18	150Z1218

- All standard sizes in-stock/same day shipment.
- Width is measured from inside seam to inside seam.
- Length is measured from the top edge to the bottom fold.
- Opening is in the “width” dimension.
- Custom bag sizes, custom printing, and custom hot stamping are available.
- Most sizes are packed 100 per case. Small sizes are packed 1000 or 500 per case.

P R O D U C T D A T A S H E E T

SCC 1500 Metal-out Static Shielding Bag

PRODUCT	ITEM NUMBER	DATASHEET
STATIC SHIELDING BAG, OPEN TOP AND ZIPTOP	150(W”)(L”)	1101-B 98-0799-1066-1

3M Electronic Solutions Division
6801 River Place Blvd
Austin, TX 78726-9000
US and Canada: 866-722-3736
Fax: 866-722-3735
Intl: 919-718-0000; Fax: 919-774-8174
email: 3Mstaticinfo@mmm.com; www.3Mstatic.com

3M is a trademark of 3M Company.
All other trademarks herein are the property of their respective owners.
© 3M 2011. All rights reserved.

3M™ Moisture Barrier Bag Dri-Shield 2000

This aluminized moisture barrier bag is designed to provide a static safe environment for sensitive electronic devices. The bags are heat sealable and suitable for vacuum packaging. Bags are printed with ESD and moisture warning symbols and a lot code for traceability.

3M Moisture Barrier Bags Dri-Shield 2000 are manufactured from a laminate of multiple layers of aluminized polyester and polyethylene. Polyester provides puncture resistance. Metal layers are intended to provide shielding of Electrostatic Discharge (ESD) and to help minimize the penetration of electric field.

These bags are tested to meet or exceed certain electrical and physical requirements of ANSI/ESD S541, and to be ANSI/ESD S20.20 program compliant. Bags are RoHS Compliant* and lead-free**.

3M™ Moisture Barrier Bag
Dri-Shield 2000

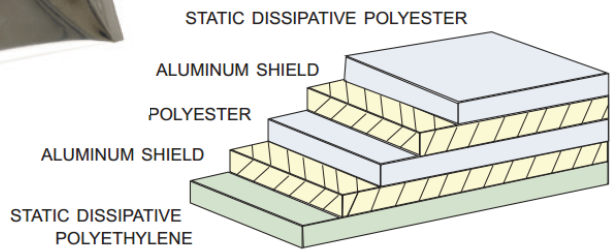

Physical	Typical Values	Testing Method
Moisture Vapor Transmission Rate (MVTR)	0.035 grams/100 sq. in./24 hrs.[1]	MIL-STD-3010C Method 3030
Tensile Strength	7800 PSI, 54 MPa	ASTM D882
Puncture Resistance	20 lbs, 89 N	MIL-STD-3010C Method 2065
Seal Strength	15 lbs, 66N	ASTM D882
Thickness	3.6 mils, .0914 mm +/-15%	MIL-STD-3010C Method 1003
Marking Adhesion	Pass	IPC-TM-650 2.4.1
Electrical	**Typical Values**	**Testing Method**
ESD Shielding	<10 nJ	ANSI/ESD STM11.31
Surface Resistance - Interior	$<1x10^{11}$ ohms	ANSI/ESD STM11.11
Surface Resistance - Exterior	$<1x10^{11}$ ohms	ANSI/ESD STM11.11
Static Decay	< 2 seconds	ETS 406D Static Decay Meter, 5kV, 1% Cutoff, 12%RH
EMI Attenuation	45 dB	1 to 10 GHz
Cleanliness	**Typical Values**	**Testing Method**
Silicone	Not Detected	FTIR
Heat Sealing Conditions	**Typical Values**	
Temperature	300°F - 400°F, 140°C - 204°C	
Time	0.6 - 4.5 seconds	
Pressure	30 - 70 PSI, 2.05 - 4.8 KPa	

[1] Standard deviation of 0.008 grams/100 sq. in./24 hrs.

This product is intended for commercial use only. This product is not on the Qualified Product Listing under the Defense Standardization Program.

3M™ Moisture Barrier Bag Dri-Shield 2000

Dimensions (W x L in.)	Part No.	Dimensions (W x L in.)	Part No.	Dimensions (W x L in.)	Part No.
3 x 5	70035	6 x 30	700630	12 x 18	7001218
4 x 6	70046	8 x 10	700810	14 x 30	7001430
4 x 24	700424	8 x 12	700812	15 x 18	7001518
5 x 30	700530	10 x 12	7001012	16 x 18	7001618
6 x 8	70068	10 x 20	7001020	17 x 19	7001719
6 x 10	700610	10 x 24	7001024	18 x 18	7001818
6 x 24	700624	10 x 30	7001030	18 x 24	7001824
		12 x 16	7001216		

Custom sizes and printing available.

Open Top Bag

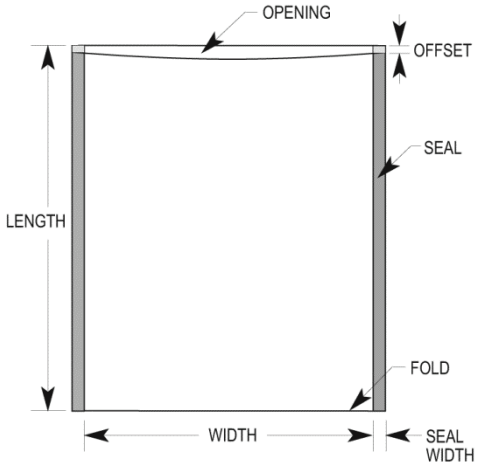

Tolerance (inches): Width -0, +0.250
Length +/- 0.125 Offset 0 to 0.250
Seal width +/- 0.125

- Standard sizes stocked for prompt shipment (usually same day) .
- Width is measured from inside seam to inside seam.
- Length is measured from the top edge to the bottom fold.
- Opening is in the "width" dimension.
- Custom bag sizes, custom printing and custom hot stamping are available.
- Most sizes are packed 100 per case.
- Small sizes are packed 500 or 1,000 per case.

Important Notice
All statements, technical information, and recommendations related to 3M's products are based on information believed to be reliable, but the accuracy or completeness is not guaranteed. Before using this product, you must evaluate it and determine if it is suitable for your intended application. You assume all risks and liability associated with such use. Any statements related to the product which are not contained in 3M's current publications, or any contrary statements contained on your purchase order shall have no force or effect unless expressly agreed upon, in writing, by an authorized officer of 3M.

Warranty; Limited Remedy; Limited Liability.
This product will be free from defects in material and manufacture for one year from the time of purchase. **3M MAKES NO OTHER WARRANTIES INCLUDING, BUT NOT LIMITED TO, ANY IMPLIED WARRANTY OF MERCHANTABILITY OR FITNESS FOR A PARTICULAR PURPOSE**. If this product is defective within the warranty period stated above, your exclusive remedy shall be, at 3M's option, to replace or repair the 3M product or refund the purchase price of the 3M product. **Except where prohibited by law, 3M will not be liable for any indirect, special, incidental or consequential loss or damage arising from this 3M product, regardless of the legal theory asserted.**

3M is a trademark of 3M Company. All other trademarks are owned by their respective companies.

* **RoHS 2011/65/EU Compliant** means that the product or part does not contain any of the substances in excess of the maximum concentration values ("MCVs") in EU RoHS Directive 2011/65/EU. The MCVs are by weight in homogeneous materials. This information represents 3M's knowledge and belief, which may be based in whole or in part on information provided by third party suppliers to 3M.

In the event any product is proven not to conform with 3M's Regulatory Information, then 3M's entire liability and Buyer's exclusive remedy will be in accordance with the Warranty stated below.

**Lead-free means that the product has less than 2 ppm of lead when tested by ICP-AES, with reference to EPA method 3051A/3052.

Electronic Solutions Division
Static Control Products
926 JR Industrial Drive
Sanford, NC 27332-9733
Toll-Free: 866-722-3736
International: 919-718-0000
Email: 3mstaticinfo@mmm.com
www.3Mstatic.com

Please recycle. Printed in USA.
© 3M 2013. All rights reserved.
98-0799-1139-6 JHA

3M™ Moisture Barrier Bag Dri-Shield 2700

This aluminized moisture barrier bag is designed to provide a static safe environment for sensitive electronic devices. A stronger polyester layer helps to prevent sharp trays from puncturing the bag. The bags are heat sealable and suitable for vacuum packaging. Bags are printed with ESD and moisture warning symbols and a lot code for traceability.

3M Moisture Barrier Bags Dri-Shield 2700 are manufactured from a laminate of multiple layers of aluminized polyester and polyethylene. Polyester provides puncture resistance. Metal layers are intended to provide shielding of Electrostatic Discharge (ESD) and to help minimize the penetration of electric field.

These bags are tested to meet or exceed certain electrical and physical requirements of ANSI/ESD S541, and to be ANSI/ESD S20.20 program compliant. Bags are RoHS Compliant* and lead-free**.

3M™ Moisture Barrier Bag
Dri-Shield 2700

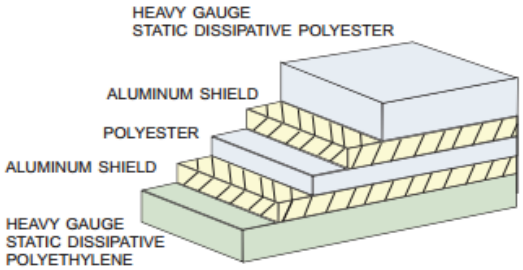

Physical	Typical Values	Testing Method
Moisture Vapor Transmission Rate (MVTR)	0.030 grams/100 sq. in./24 hrs.[1]	MIL-STD-3010C Method 3030
Tensile Strength	6550 PSI, 45 MPa	ASTM D882
Puncture Resistance	30 lbs, 133 N	MIL-STD-3010C Method 2065
Seal Strength	20 lbs, 89 N	ASTM D882
Thickness	7 mils, .1778 mm +/-15%	MIL-STD-3010C Method 1003
Marking Adhesion	Pass	IPC-TM-650 2.4.1
Electrical	**Typical Values**	**Testing Method**
ESD Shielding	<10 nJ	ANSI/ESD STM11.31
Surface Resistance - Interior	$<1x10^{11}$ ohms	ANSI/ESD STM11.11
Surface Resistance - Exterior	$<1x10^{11}$ ohms	ANSI/ESD STM11.11
Static Decay	< 2 seconds	ETS 406D Static Decay Meter, 5kV, 1% Cutoff, 12%RH
EMI Attenuation	45 dB	1 to 10 GHz
Cleanliness	**Typical Values**	**Testing Method**
Silicone	Not Detected	FTIR
Heat Sealing Conditions	**Typical Values**	
Temperature	400°F, 204°C	
Time	0.6 - 4.5 seconds	
Pressure	30 - 70 PSI, 2.05 - 4.8 KPa	

[1] Standard deviation of 0.016 grams/100 sq. in./24 hrs.

This product is intended for commercial use only. This product is not on the Qualified Product Listing under the Defense Standardization Program.

3M™ Moisture Barrier Bag Dri-Shield 2700

Dimensions (W x L in.)	Part No.	Dimensions (W x L in.)	Part No.	Dimensions (W x L in.)	Part No.
4 x 6	D2746	10 x 20	D271020	15 x 18	D271518
10.5 x 18	D2710.518	10 x 30	D271030	16 x 18	D271618
10 x 12	D271012	12 x 16	D271216		
Custom sizes and printing available.					

Open Top Bag

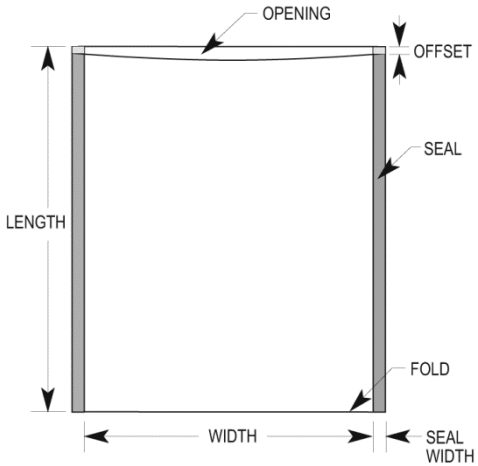

Tolerance (inches): Width -0, +0.250
Length +/- 0.125 Offset 0 to 0.250
Seal width +/- 0.125

- Standard sizes stocked for prompt shipment (usually same day).
- Width is measured from inside seam to inside seam.
- Length is measured from the top edge to the bottom fold.
- Opening is in the "width" dimension.
- Custom bag sizes, custom printing and custom hot stamping are available.
- Most sizes are packed 100 per case.
- Small sizes are packed 500 or 1,000 per case.

Important Notice
All statements, technical information, and recommendations related to 3M's products are based on information believed to be reliable, but the accuracy or completeness is not guaranteed. Before using this product, you must evaluate it and determine if it is suitable for your intended application. You assume all risks and liability associated with such use. Any statements related to the product which are not contained in 3M's current publications, or any contrary statements contained on your purchase order shall have no force or effect unless expressly agreed upon, in writing, by an authorized officer of 3M.

Warranty; Limited Remedy; Limited Liability.
This product will be free from defects in material and manufacture for one year from the time of purchase. **3M MAKES NO OTHER WARRANTIES INCLUDING, BUT NOT LIMITED TO, ANY IMPLIED WARRANTY OF MERCHANTABILITY OR FITNESS FOR A PARTICULAR PURPOSE**. If this product is defective within the warranty period stated above, your exclusive remedy shall be, at 3M's option, to replace or repair the 3M product or refund the purchase price of the 3M product. **Except where prohibited by law, 3M will not be liable for any indirect, special, incidental or consequential loss or damage arising from this 3M product, regardless of the legal theory asserted.**

3M is a trademark of 3M Company. All other trademarks are owned by their respective companies.

* **RoHS 2011/65/EU Compliant** means that the product or part does not contain any of the substances in excess of the maximum concentration values ("MCVs") in EU RoHS Directive 2011/65/EU. The MCVs are by weight in homogeneous materials. This information represents 3M's knowledge and belief, which may be based in whole or in part on information provided by third party suppliers to 3M.

In the event any product is proven not to conform with 3M's Regulatory Information, then 3M's entire liability and Buyer's exclusive remedy will be in accordance with the Warranty stated below.

**Lead-free means that the product has less than 2 ppm of lead when tested by ICP-AES, with reference to EPA method 3051A/3052.

Electronic Solutions Division
Static Control Products
926 JR Industrial Drive
Sanford, NC 27332-9733
Toll-Free: 866-722-3736
International: 919-718-0000
Email: 3mstaticinfo@mmm.com
www.3Mstatic.com

Please recycle. Printed in USA.
© 3M 2013. All rights reserved.
98-0799-1140-4 JHA

3M™ Moisture Barrier Bag Dri-Shield 3000

This foil moisture barrier bag is designed to provide a static safe environment for sensitive electronic devices. A nylon layer helps to strengthen the bag. The bags are heat sealable and suitable for vacuum packaging. Bags are printed with ESD and moisture warning symbols, and a lot code for traceability.

3M Moisture Barrier Bags Dri-Shield 3000 are manufactured from a laminate of nylon, foil, and polyethylene. The metal layer is intended to provide shielding of Electrostatic Discharge (ESD) and to help minimize the penetration of electric field.

These bags are tested to meet or exceed certain electrical and physical requirements of Moisture Barrier Bags, ANSI/ESD S541, and to be ANSI/ESD S20.20 program compliant. Bags are RoHS Compliant* and lead-free**.

3M™ Moisture Barrier Bag
Dri-Shield 3000

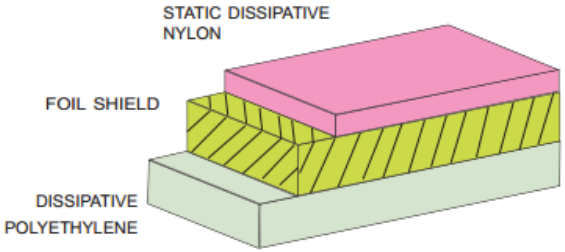

Physical	Typical Value	Testing Method
Moisture Vapor Transmission Rate (MVTR)	≤ 0.0003 grams/100 sq. in./24 hrs.	ASTM F1249
Tensile Strength	3800 PSI, 26 MPa	ASTM D882
Puncture Resistance	16 lbs, 71 N	MIL-STD-3010C Method 2065
Seal Strength	15 lbs, 66 N	ASTM D882
Thickness	6 mils, .1524 mm +/-15%	MIL-STD-3010C Method 1003
Marking Adhesion	Pass	IPC-TM-650 2.4.1
Electrical	**Typical Value**	**Testing Method**
ESD Shielding	<10 nJ	ANSI/ESD STM11.31
Surface Resistance - Interior	$<1x10^{11}$ ohms	ANSI/ESD STM11.11
Surface Resistance - Exterior	$<1x10^{11}$ ohms	ANSI/ESD STM11.11
Static Decay	< 2 seconds	ETS 406D Static Decay Meter, 5kV, 1% Cutoff, 12%RH
EMI Attenuation	45 dB	1 to 10 GHz
Cleanliness	**Typical Value**	**Testing Method**
Silicone	Not Detected	ASTM E168
Heat Sealing Conditions	**Typical Value**	
Temperature	400°F, 204°C	
Time	0.6 – 4.5 seconds	
Pressure	30 – 70 PSI, 2.05 – 4.8 KPa	

This product is intended for commercial use only. This product is not on the Qualified Product Listing under the Defense Standardization Program.

3M™ Moisture Barrier Bag Dri-Shield 3000

Dimensions (W x L in.)	Part No.
10 x 20	D301020
10 x 30	D301030
16 x 18	D301618

- Standard sizes available for prompt shipment (usually same day).
- Width is measured from inside seam to inside seam.
- Length is measured from the top edge to the bottom fold.
- Opening is in the "width" dimension.
- Custom bag sizes, custom printing, and custom hot stamping are available.
- Most sizes are packed 100 per case.
- Small sizes are packed 500 or 1,000 per case.

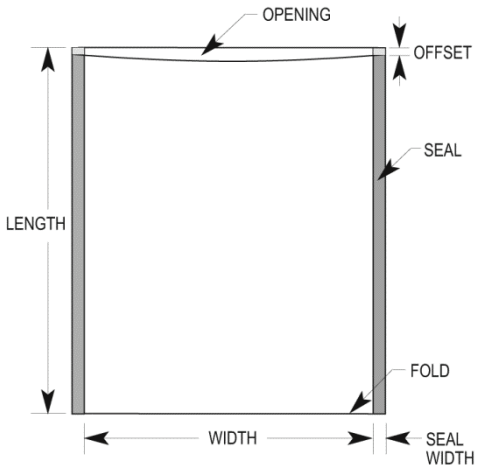

Tolerance (inches): Width -0, +0.250
Length +/- 0.125 Offset 0 to 0.250
Seal width +/- 0.125

Important Notice
All statements, technical information, and recommendations related to 3M's products are based on information believed to be reliable, but the accuracy or completeness is not guaranteed. Before using this product, you must evaluate it and determine if it is suitable for your intended application. You assume all risks and liability associated with such use. Any statements related to the product which are not contained in 3M's current publications, or any contrary statements contained on your purchase order shall have no force or effect unless expressly agreed upon, in writing, by an authorized officer of 3M.

Warranty; Limited Remedy; Limited Liability.
This product will be free from defects in material and manufacture for one year from the time of purchase. **3M MAKES NO OTHER WARRANTIES INCLUDING, BUT NOT LIMITED TO, ANY IMPLIED WARRANTY OF MERCHANTABILITY OR FITNESS FOR A PARTICULAR PURPOSE**. If this product is defective within the warranty period stated above, your exclusive remedy shall be, at 3M's option, to replace or repair the 3M product or refund the purchase price of the 3M product. **Except where prohibited by law, 3M will not be liable for any indirect, special, incidental or consequential loss or damage arising from this 3M product, regardless of the legal theory asserted.**

3M is a trademark of 3M Company. All other trademarks are owned by their respective companies.

* **RoHS 2011/65/EU Compliant** means that the product or part does not contain any of the substances in excess of the maximum concentration values ("MCVs") in EU RoHS Directive 2011/65/EU. The MCVs are by weight in homogeneous materials. This information represents 3M's knowledge and belief, which may be based in whole or in part on information provided by third party suppliers to 3M.

In the event any product is proven not to conform with 3M's Regulatory Information, then 3M's entire liability and Buyer's exclusive remedy will be in accordance with the Warranty stated below.

**Lead-free means that the product has less than 2 ppm of lead when tested by ICP-AES, with reference to EPA method 3051A/3052.

Electronic Solutions Division
Static Control Products
926 JR Industrial Drive
Sanford, NC 27332-9733
Toll-Free: 866-722-3736
International: 919-718-0000
Email: 3mstaticinfo@mmm.com
www.3Mstatic.com

Please recycle. Printed in USA.
© 3M 2013. All rights reserved.
98-0799-1129-7 JHA

3M™ Moisture Barrier Bag Dri-Shield 3400

This foil moisture barrier bag is designed to provide a static safe environment for sensitive electronic devices. The bags are heat sealable and suitable for vacuum packaging. Bags are printed with ESD and moisture warning symbols, and a lot code for traceability.

3M Moisture Barrier Bags Dri-Shield 3400 are manufactured from a laminate of polyester, foil, and polyethylene. The metal layer is intended to provide shielding of Electrostatic Discharge (ESD) and to help minimize the penetration of electric field.

These bags are tested to meet or exceed certain electrical and physical requirements of ANSI/ESD S541 and to be ANSI/EDS S20.20 program compliant. Bags are RoHS Compliant* and lead-free**.

3M™ Moisture Barrier Bag
Dri-Shield 3400

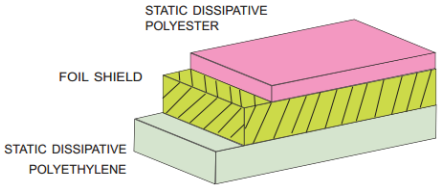

Physical	Typical Value	Testing Method
Moisture Vapor Transmission Rate (MVTR)	≤ 0.0003 grams/100 sq. in./24 hrs	ASTM F1249
Tensile Strength	6000 PSI, 41 MPa	ASTM D882
Puncture Resistance	20 lbs, 88 N	MIL-STD-3010 Method 2065
Seal Strength	15 lbs, 66 N	ASTM D882
Thickness	4 mils, .1016 mm +/-15%	MIL-STD-3010 Method 1003
Marking Adhesion	Pass	IPC-TM-650 2.4.1
Electrical	**Typical Value**	**Testing Method**
ESD Shielding	<10 nJ	ANSI/ESD STM11.31
Surface Resistance - Interior	$<1x10^{11}$ ohms	ANSI/ESD STM11.11
Surface Resistance - Exterior	$<1x10^{11}$ ohms	ANSI/ESD STM11.11
Static Decay	< 2 seconds	ETS 406D Static Decay Meter, 5kV, 1% Cutoff, 12%RH For commercial application
EMI Attenuation	45 dB	1 to 10 GHz
Cleanliness	**Typical Value**	**Testing Method**
Silicone	Not Detected	ASTM E168
Heat Sealing Conditions	**Typical Value**	
Temperature	400°F, 204°C	
Time	0.6 – 4.5 seconds	
Pressure	30 – 70 PSI, 2.05 – 4.8 KPa	

This product is intended for commercial use only. This product is not on the Qualified Product Listing under the Defense Standardization Program.

3M™ Moisture Barrier Bag Dri-Shield 3400

Dimensions (W x L in.)	Part No.
10 x 20	D341020
10 x 30	D341030
16 x 18	D341618

- Standard sizes stocked for prompt shipment (usually same day).
- Width is measured from inside seam to inside seam.
- Length is measured from the top edge to the bottom fold.
- Opening is in the “width” dimension.
- Custom bag sizes, custom printing, and custom hot stamping are available.
- Most sizes are packed 100 per case.
- Small sizes are packed 500 or 1,000 per case.

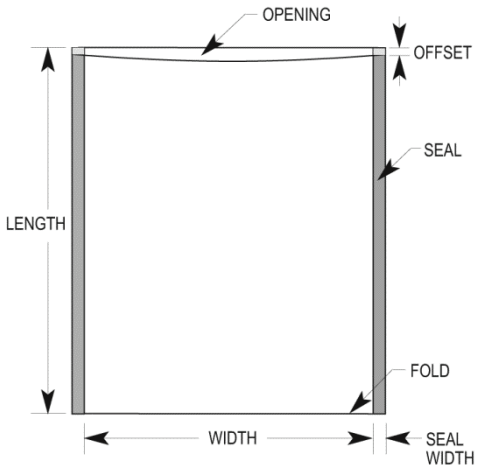

Tolerance (inches): Width -0, +0.250
Length +/- 0.125 Offset 0 to 0.250
Seal width +/- 0.125

Important Notice
All statements, technical information, and recommendations related to 3M’s products are based on information believed to be reliable, but the accuracy or completeness is not guaranteed. Before using this product, you must evaluate it and determine if it is suitable for your intended application. You assume all risks and liability associated with such use. Any statements related to the product which are not contained in 3M’s current publications, or any contrary statements contained on your purchase order shall have no force or effect unless expressly agreed upon, in writing, by an authorized officer of 3M.

Warranty; Limited Remedy; Limited Liability.
This product will be free from defects in material and manufacture for one year from the time of purchase. **3M MAKES NO OTHER WARRANTIES INCLUDING, BUT NOT LIMITED TO, ANY IMPLIED WARRANTY OF MERCHANTABILITY OR FITNESS FOR A PARTICULAR PURPOSE**. If this product is defective within the warranty period stated above, your exclusive remedy shall be, at 3M’s option, to replace or repair the 3M product or refund the purchase price of the 3M product. **Except where prohibited by law, 3M will not be liable for any indirect, special, incidental or consequential loss or damage arising from this 3M product, regardless of the legal theory asserted.**

3M is a trademark of 3M Company. All other trademarks are owned by their respective companies.

* **RoHS 2011/65/EU Compliant** means that the product or part does not contain any of the substances in excess of the maximum concentration values (“MCVs”) in EU RoHS Directive 2011/65/EU. The MCVs are by weight in homogeneous materials. This information represents 3M’s knowledge and belief, which may be based in whole or in part on information provided by third party suppliers to 3M.

In the event any product is proven not to conform with 3M’s Regulatory Information, then 3M’s entire liability and Buyer’s exclusive remedy will be in accordance with the Warranty stated below.

**Lead-free means that the product has less than 2 ppm of lead when tested by ICP-AES, with reference to EPA method 3051A/3052.

Electronic Solutions Division
Static Control Products
926 JR Industrial Drive
Sanford, NC 27332-9733
Toll-Free: 866-722-3736
International: 919-718-0000
Email: 3mstaticinfo@mmm.com
www.3Mstatic.com

Please recycle. Printed in USA.
© 3M 2013. All rights reserved.
98-0799-1130-5 JHA

3M™ Moisture Barrier Bag 3370

This aluminized moisture barrier bag is designed to provide a static safe environment for sensitive electronic devices. The bags are heat sealable and suitable for vacuum packaging. Bags are printed with ESD and moisture warning symbols and a lot code for traceability.

3M Moisture Barrier Bags 3370 are manufactured from a laminate of multiple layers of aluminized polyester and polyethylene. Polyester provides puncture resistance. Metal layers are intended to provide shielding of Electrostatic Discharge (ESD) and to help minimize the penetration of electric field.

These bags are tested to meet or exceed certain electrical and physical requirements of ANSI/ESD S541, and to be ANSI/ESD S20.20 program compliant. Bags are RoHS Compliant* and lead-free**.

3M™ Moisture Barrier Bag 3370

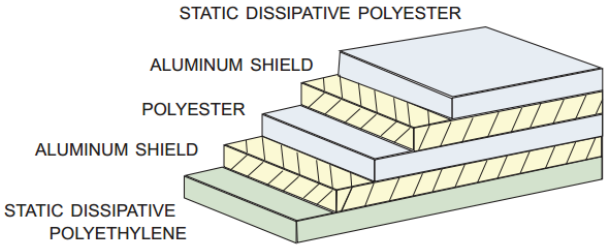

Physical	Typical Values	Testing Method
Moisture Vapor Transmission Rate (MVTR)	0.028 grams/100 sq. in./24 hrs.[1]	MIL-STD-3010C Method 3030
Tensile Strength	7800 PSI, 54 Mpa	ASTM D882
Puncture Resistance	20 lbs, 89 N	MIL-STD-3010C Method 2065
Seal Strength	16 lbs, 71 N	ASTM D882
Thickness	3.6 mils, .09144 mm +/-15%	MIL-STD-3010C Method 1003
Marking Adhesion	Pass	IPC-TM-650 2.4.1
Electrical	**Typical Values**	**Testing Method**
ESD Shielding	<10 nJ	ANSI/ESD STM11.31
Surface Resistance - Interior	$<1x10^{11}$ ohms	ANSI/ESD STM11.11
Surface Resistance - Exterior	$<1x10^{11}$ ohms	ANSI/ESD STM11.11
Static Decay	< 2 seconds	ETS 406D Static Decay Meter, 5kV, 1% Cutoff, 12%RH
Cleanliness	Typical Values	Testing Method
Silicone	Not detected	FTIR
Outgassing	150 µg/g	DHS
NVR	7.1 µg/cm²	Hexane Extract
IC (Anions)	CL .025 µg/cm²	IC of DI Water Extract
	NO3 0.16 µg/cm²	IC of DI Water Extract
	S04 not detected	IC of DI Water Extract
Heat Sealing Conditions	Typical Values	
Temperature	400°F, 204°C	
Time	0.6 – 4.5 seconds	
Pressure	30 – 70 PSI, 2.05 – 4.8 KPa	

[1] Standard deviation of 0.01 grams/100 sq. in./24 hrs.

This product is intended for commercial use only. This product is not on the Qualified Product Listing under the Defense Standardization Program.

3M™ Moisture Barrier Bag 3370

W x L (in.)	Part No.	W x L (in.)	Part No.	W x L (in.)	Part No.

Please call for sizes.
Custom sizes and printing available.

Open Top Bag

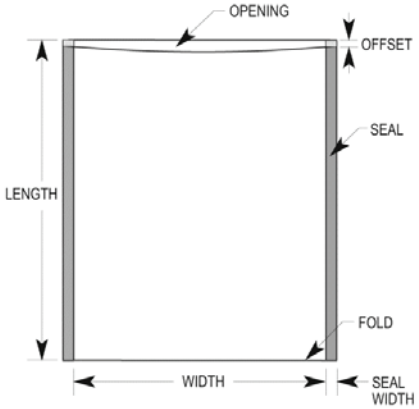

Tolerance (inches): Width -0, +0.250
Length +/- 0.125 Offset 0 to 0.250
Seal width +/- 0.125

- Width is measured from inside seam to inside seam.
- Length is measured from the top edge to the bottom fold.
- Opening is in the "width" dimension.
- Custom bag sizes, custom printing and custom hot stamping are available.
- Most sizes are packed 100 per case.
- Small sizes are packed 500 or 1,000 per case.

Important Notice
All statements, technical information, and recommendations related to 3M's products are based on information believed to be reliable, but the accuracy or completeness is not guaranteed. Before using this product, you must evaluate it and determine if it is suitable for your intended application. You assume all risks and liability associated with such use. Any statements related to the product which are not contained in 3M's current publications, or any contrary statements contained on your purchase order shall have no force or effect unless expressly agreed upon, in writing, by an authorized officer of 3M.

Warranty; Limited Remedy; Limited Liability.
This product will be free from defects in material and manufacture for one year from the time of purchase. **3M MAKES NO OTHER WARRANTIES INCLUDING, BUT NOT LIMITED TO, ANY IMPLIED WARRANTY OF MERCHANTABILITY OR FITNESS FOR A PARTICULAR PURPOSE**. If this product is defective within the warranty period stated above, your exclusive remedy shall be, at 3M's option, to replace or repair the 3M product or refund the purchase price of the 3M product. **Except where prohibited by law, 3M will not be liable for any indirect, special, incidental or consequential loss or damage arising from this 3M product, regardless of the legal theory asserted.**

3M is a trademark of 3M Company. All other trademarks are owned by their respective companies.

* **RoHS 2011/65/EU Compliant** means that the product or part does not contain any of the substances in excess of the maximum concentration values ("MCVs") in EU RoHS Directive 2011/65/EU. The MCVs are by weight in homogeneous materials. This information represents 3M's knowledge and belief, which may be based in whole or in part on information provided by third party suppliers to 3M.

In the event any product is proven not to conform with 3M's Regulatory Information, then 3M's entire liability and Buyer's exclusive remedy will be in accordance with the Warranty stated below.

**Lead-free means that the product has less than 2 ppm of lead when tested by ICP-AES, with reference to EPA method 3051A/3052.

Electronic Solutions Division
Static Control Products
926 JR Industrial Drive
Sanford, NC 27332-9733
Toll-Free: 866-722-3736
International: 919-718-0000
Email: 3mstaticinfo@mmm.com
www.3Mstatic.com

Please recycle. Printed in USA.
© 3M 2013. All rights reserved.
98-0799-1138-8 JHA